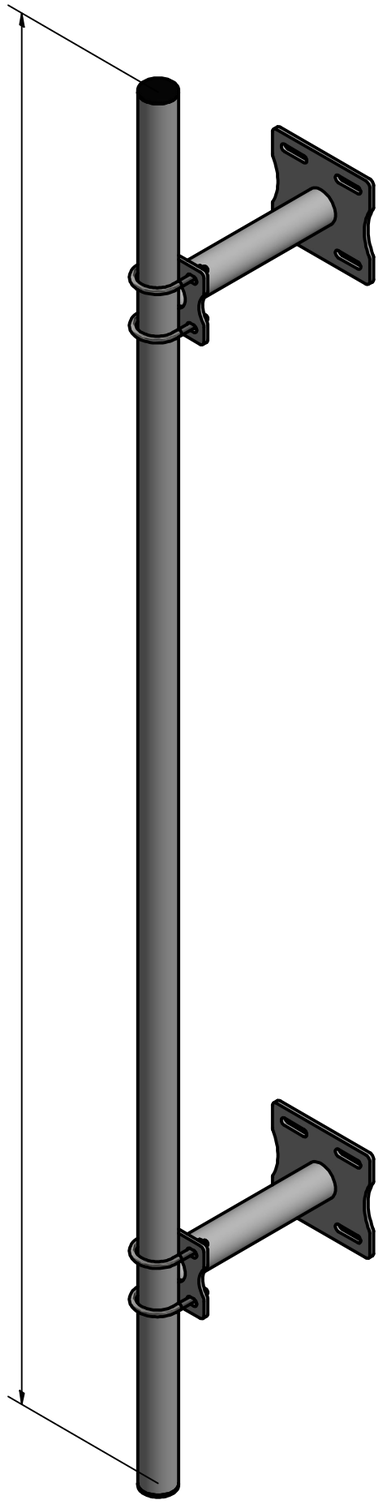

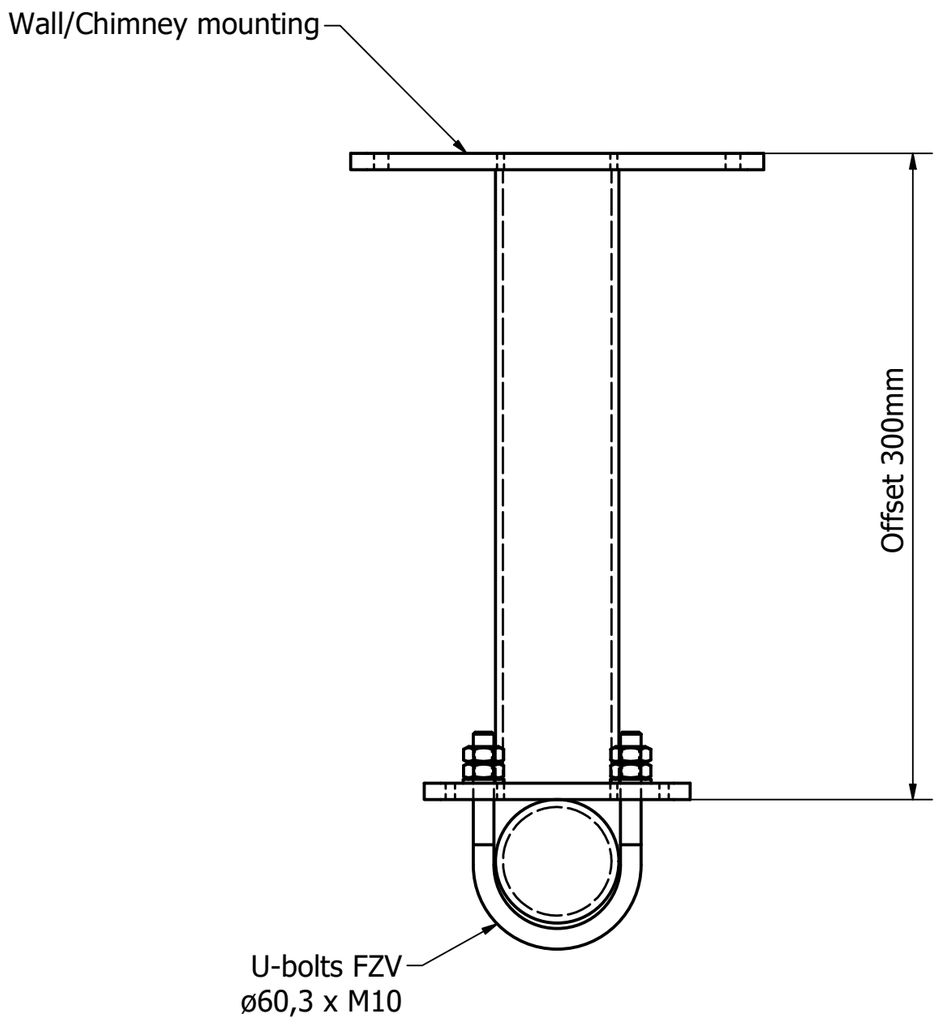

Pakkeliste - 3 sæt				
Antal	Produkt	Størrelse	Materiale	Vægt
12 stk	Hårnål	Ø60xM10	FZV	
48 stk	Møtrik	M10	FZV	508g
24 stk	SKive	M10	FZV	77g

Designed by	Checked by	Approved by	Date		Date	
ABP					03-02-2021	
TELECOMSTEEL DANISH DESIGN & QUALITY		Support pole wall/chimney				
				Revision A	Sheet 1 / 1	